CONFIDENTIAL

Room Air Conditioner

SVC MANUAL(Exploded View)

MODEL : W3NQ22TSNS3.AXWGIDA
UW-Q24WWYA.ASLG

CAUTION

Before Servicing the unit, read the safety precautions in General SVC manual.
Only for authorized service personnel.

Any reproduction, duplication, distribution (including by way of email, facsimile or other electronic means), publication, modification, copying or transmission of this Service Manual is STRICTLY PROHIBITED unless you have obtained the prior written consent of the LG Electronics entity from which you received this Service Manual. The material covered by this prohibition includes, without limitation, any text, graphics or logos in this Service Manual.

Copyright © 2025 LG Electronics Inc. All rights reserved. Only training and service purpose.

Safety Precautions

To prevent injury to the user or other people and property damage, the following instructions must be followed.

■ Incorrect operation due to ignoring instruction will cause harm or damage. The seriousness is classified by the following indications.

⚠WARNING	This symbol indicates the possibility of death or serious injury.
⚠CAUTION	This symbol indicates the possibility of injury or damage to properties only.

■ Meanings of symbols used in this manual are as shown below.

⃠	**Be sure not to do.**
❗	**Be sure to follow the instruction.**

⚠WARNING

■ Installation

Do not use damaged power cord plugs, or a loose socket.

• There is risk of fire or electric shock.

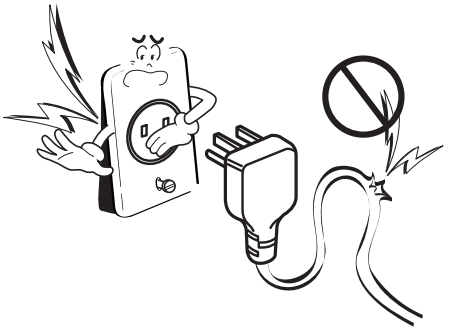

Always use the power plug and socket with the ground terminal.

• There is risk of electric shock.

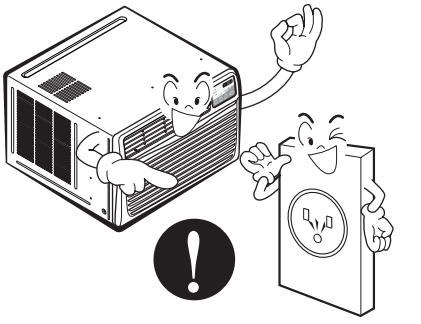

Copyright © 2025 LG Electronics Ins. All right reserved.
Only training and service purpose.

Do not modify or extend the power cord.

- There is risk or fire or electric shock.

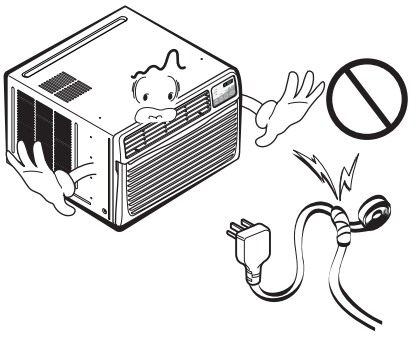

Be cautious when unpacking and installing the product.

- Sharp edges could cause injury. Be especially careful of the case edges and the fins on the condenser and evaporator.

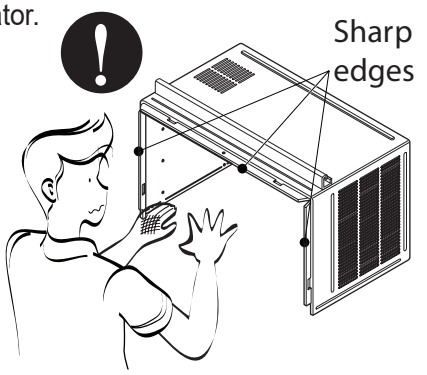

Be sure the installation area does not deteriorate with age.

- If the base collapses, the air conditioner could fall with it, causing property damage, product failure, and personal injury.

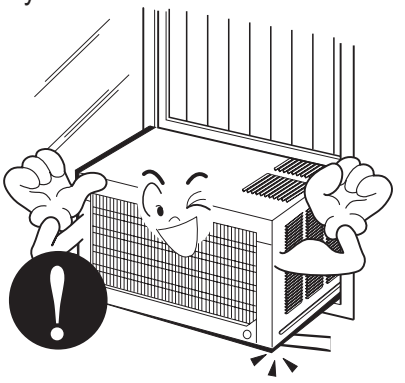

Do not install, remove, or re-install the unit by yourself(customer).

- There is risk of fire, electric shock, explosion, or injury.

Do not store or use flammable gas or combustibles near the air conditioner.

- There is risk of fire or failure of product.

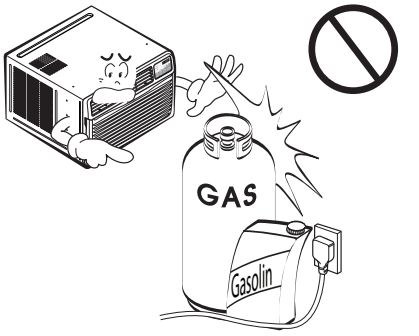

Copyright © 2025 LG Electronics Ins. All right reserved.
Only training and service purpose.

IMPORTANT SAFETY INSTRUCTIONS

WARNING

To reduce the risk of explosion, fire, death, electric shock, scalding or injury to persons, follow basic precautions, including the following:

- Keep any required ventilation openings clear of obstruction.
- Compliance with national gas regulations shall be observed.
- This appliance is not intended for use by persons (including children) with reduced physical,sensory or mental capabilities, or lack of experience and knowledge, unless they have been given supervision or instruction concerning the use of the appliance by a person responsible for their safety. Children should be supervised to ensure that they do not play with the appliance.
- If the supply cord is damaged, it must be replaced by the manufacturer, its service agent or similarly qualified person in order to avoid a hazard.
- Do not use means to accelerate the defrosting process or to clean, other than those recommended by the manufacturer.
- The appliance shall be stored in a room without continuously operating open flames (for example an operating gas appliance) and ignition sources (for example an operating electric heater).
- Do not pierce or burn. Be aware that flammable refrigerants may not contain an odor.
- The appliance shall be stored in a well-ventilated area where the room size corresponds to the room area as specified for operation.
- The appliance shall be stored so as to prevent mechanical damage from occurring.
- Any person who is involved with working on or breaking into a refrigerant circuit should hold a current valid certificate from an industry-accredited assessment authority, which authorises their competence to handle refrigerants safely in accordance with an industry recognised assessment specification.
- Servicing shall only be performed as recommended by the equipment manufacturer. Maintenance and repair requiring the assistance of other skilled personnel shall be carried out under the supervision of the person competent in the use of flammable refrigerants.
- If you want to know information of installation, Read Installation Manual.
- Mechanical connections (mechanical connectors or flared joints) shall be accessible for maintenance purposes.

WARNING

Checks to the area

- Prior to beginning work on systems containing flammable refrigerants, safety checks are necessary to ensure that the risk of ignition is minimised. For repair to the refrigerating system, the following precautions shall be complied with prior to conducting work on the system.

Work procedure

- Work shall be undertaken under a controlled procedure so as to minimise the risk of a flammable gas or vapour being present while the work is being performed.

General work area

- All maintenance staff and others working in the local area shall be instructed on the nature of work being carried out. Work in confined spaces shall be avoided. The area around the workspace shall be sectioned off. Ensure that the conditions within the area have been made safe by control of flammable material.

Checking for presence of refrigerant

- The area shall be checked with an appropriate refrigerant detector prior to and during work, to ensure the technician is aware of potentially flammable atmospheres. Ensure that the leak detection equipment being used is suitable for use with flammable refrigerants, i.e. non-sparking, adequately sealed or intrinsically safe.

Presence of fire extinguisher

- If any hot work is to be conducted on the refrigeration equipment or any associated parts, appropriate fire extinguishing equipment shall be available to hand. Have a dry powder or CO2 fire extinguisher adjacent to the charging area.

Copyright © 2025 LG Electronics Ins. All right reserved.
Only training and service purpose.

No ignition sources

- No person carrying out work in relation to a refrigeration system which involves exposing any pipe work that contains or has contained flammable refrigerant shall use any sources of ignition in such a manner that it may lead to the risk of fire or explosion. All possible ignition sources, including cigarette smoking, should be kept sufficiently far away from the site of installation, repairing, removing and disposal, during which flammable refrigerant can possibly be released to the surrounding space. Prior to work taking place, the area around the equipment is to be surveyed to make sure that there are no flammable hazards or ignition risks.
  "No Smoking" signs shall be displayed.

Ventilated area

- Ensure that the area is in the open or that it is adequately ventilated before breaking into the system or conducting any hot work. A degree of ventilation shall continue during the period that the work is carried out. The ventilation should safely disperse any released refrigerant and preferably expel it externally into the atmosphere.

Checks to the refrigeration equipment

- Where electrical components are being changed, they shall be fit for the purpose and to the correct specification. At all times the manufacturer's maintenance and service guidelines shall be followed. If in doubt consult the manufacturer's technical department for assistance.
- The following checks shall be applied to installations using flammable refrigerants:
  - The actual refrigerant charge is in accordance with the room size within which the refrigerant containing parts are installed.
  - The ventilation machinery and outlets are operating adequately and are not obstructed.
  - If an indirect refrigerating circuit is being used, the secondary circuit shall be checked for the presence of refrigerant.
  - Marking to the equipment continues to be visible and legible. Markings and signs that are illegible shall be corrected.
  - Refrigeration pipe or components are installed in a position where they are unlikely to be exposed to any substance which may corrode refrigerant containing components, unless the components are constructed of materials which are inherently resistant to being corroded or are suitably protected against being so corroded.

Checks to electrical devices

- Repair and maintenance to electrical components shall include initial safety checks and component inspection procedures. If a fault exists that could compromise safety, then no electrical supply shall be connected to the circuit until it is satisfactorily dealt with. If the fault cannot be corrected immediately but it is necessary to continue operation, an adequate temporary solution shall be used. This shall be reported to the owner of the equipment so all parties are advised.
- Initial safety checks shall include:
  - Capacitors are discharged: this shall be done in a safe manner to avoid possibility of sparking.
  - No live electrical components and wiring are exposed while charging, recovering or purging the system.
  - Continuity of earth bonding.

Repairs to sealed components

- During repairs to sealed components, all electrical supplies shall be disconnected from the equipment being worked upon prior to any removal of sealed covers, etc.
- If it is absolutely necessary to have an electrical supply to equipment during servicing, then a permanently operating form of leak detection shall be located at the most critical point to warn of a potentially hazardous situation.
- Particular attention shall be paid to the following to ensure that by working on electrical components, the casing is not altered in such a way that the level of protection is affected.
- This shall include damage to cables, excessive number of connections, terminals not made to original specification, damage to seals, incorrect fitting of glands, etc.
- Ensure that apparatus is mounted securely.
- Ensure that seals or sealing materials have not degraded such that they no longer serve the purpose of preventing the ingress of flammable atmospheres.
- Replacement parts shall be in accordance with the manufacturer's specifications.

Copyright © 2025 LG Electronics Ins. All right reserved.
Only training and service purpose.

Repair to intrinsically safe components

- Do not apply any permanent inductive or capacitance loads to the circuit without ensuring that this will not exceed the permissible voltage and current permitted for the equipment in use.
- Intrinsically safe components are the only types that can be worked on while live in the presence of a flammable atmosphere.
- The test apparatus shall be at the correct rating.
- Replace components only with parts specified by the manufacturer.
- Other parts may result in the ignition of refrigerant in the atmosphere from a leak.

Cabling Check

- Cabling will not be subject to wear, corrosion, excessive pressure, vibration, sharp edges or any other adverse environmental effects. The check shall also take into account the effects of ageing or continual vibration from sources such as compressors or fans.

Detection of flammable refrigerants

- Under no circumstances shall potential sources of ignition be used in the searching for or detection of refrigerant leaks. A halide torch (or any other detector using a naked flame) shall not be used.

Leak detection methods

- The following leak detection methods are deemed acceptable for systems containing flammable refrigerants.
- Electronic leak detectors shall be used to detect flammable refrigerants, but the sensitivity may not be adequate, or may need re-calibration. (Detection equipment shall be calibrated in a refrigerant-free area.)
- Ensure that the detector is not a potential source of ignition and is suitable for the refrigerant used.
- Leak detection equipment shall be set at a percentage of the LFL of the refrigerant and shall be calibrated to the refrigerant employed and the appropriate percentage of gas (25 % maximum) is confirmed.
- Leak detection fluids are suitable for use with most refrigerants but the use of detergents containing chlorine shall be avoided as the chlorine may react with the refrigerant and corrode the copper pipe-work.
- If a leak is suspected, all naked flames shall be removed/extinguished.
- If a leakage of refrigerant is found which requires brazing, all of the refrigerant shall be recovered from the system, or isolated (by means of shut off valves) in a part of the system remote from the leak.
- Oxygen free nitrogen (OFN) shall then be purged through the system both before and during the brazing process.

Removal and evacuation

- When breaking into the refrigerant circuit to make repairs – or for any other purpose – conventional procedures shall be used. However, it is important that best practice is followed since flammability is a consideration.
  The following procedure shall be adhered to:
  – Remove refrigerant.
  – Purge the circuit with inert gas.
  – Evacuate.
  – Purge again with inert gas.
  – Open the circuit by cutting or brazing.
- The refrigerant charge shall be recovered into the correct recovery cylinders. The system shall be “flushed” with OFN to render the unit safe. This process may need to be repeated several times. Compressed air or oxygen shall not be used for this task. Flushing shall be achieved by breaking the vacuum in the system with OFN and continuing to fill until the working pressure is achieved, then venting to atmosphere, and finally pulling down to a vacuum. This process shall be repeated until no refrigerant is within the system. When the final OFN charge is used, the system shall be vented down to atmospheric pressure to enable work to take place. This operation is absolutely vital if brazing operations on the pipe-work are to take place. Ensure that the outlet for the vacuum pump is not close to any ignition sources and there is ventilation available.

Charging procedures

- In addition to conventional charging procedures, the following requirements shall be followed.
  – Ensure that contamination of different refrigerants does not occur when using charging equipment. Hoses or lines shall be as short as possible to minimise the amount of refrigerant contained in them.
  – Cylinders shall be kept upright.
  – Ensure that the refrigeration system is earthed prior to charging the system with refrigerant.
  – Label the system when charging is complete (if not already).
  – Extreme care shall be taken not to overfill the refrigeration system. Prior to recharging the system it shall be pressure tested with OFN. The system shall be leak tested on completion of charging but prior to commissioning. A follow up leak test shall be carried out prior to leaving the site.

Copyright © 2025 LG Electronics Ins. All right reserved.
Only training and service purpose.

Decommissioning

- Before carrying out this procedure, it is essential that the technician is completely familiar with the equipment and all its detail.
- It is recommended good practice that all refrigerants are recovered safely.
- Prior to the task being carried out, an oil and refrigerant sample shall be taken in case analysis is required prior to re-use of reclaimed refrigerant. It is essential that electrical power is available before the task is commenced.

a) Become familiar with the equipment and its operation.
b) Isolate system electrically.
c) Before attempting the procedure ensure that:
- mechanical handling equipment is available, if required, for handling refrigerant cylinders;
- all personal protective equipment is available and being used correctly;
- the recovery process is supervised at all times by a competent person;
- recovery equipment and cylinders conform to the appropriate standards.

d) Pump down refrigerant system, if possible.
e) If a vacuum is not possible, make a manifold so that refrigerant can be removed from various parts of the system.
f) Make sure that cylinder is situated on the scales before recovery takes place.
g) Start the recovery machine and operate in accordance with manufacturer's instructions.
h) Do not overfill cylinders. (No more than 80 % volume liquid charge).
i) Do not exceed the maximum working pressure of the cylinder, even temporarily.
j) When the cylinders have been filled correctly and the process completed, make sure that the cylinders and the equipment are removed from site promptly and all isolation valves on the equipment are closed off.
k) Recovered refrigerant shall not be charged into another refrigeration system unless it has been cleaned and checked.

Labelling

- Equipment shall be labelled stating that it has been de-commissioned and emptied of refrigerant. The label shall be dated and signed. Ensure that there are labels on the equipment stating the equipment contains flammable refrigerant.

Recovery

- When removing refrigerant from a system, either for servicing or decommissioning, it is recommended good practice that all refrigerants are removed safely.
- When transferring refrigerant into cylinders, ensure that only appropriate refrigerant recovery cylinders are employed. Ensure that the correct number of cylinders for holding the total system charge are available. All cylinders to be used are designated for the recovered refrigerant and labelled for that refrigerant (i.e. special cylinders for the recovery of refrigerant). Cylinders shall be complete with pressure relief valve and associated shut-off valves in good working order. Empty recovery cylinders are evacuated and, if possible, cooled before recovery occurs. The recovery equipment shall be in good working order with a set of instructions concerning the equipment that is at hand and shall be suitable for the recovery of flammable refrigerants. In addition, a set of calibrated weighing scales shall be available and in good working order. Hoses shall be complete with leak-free disconnect couplings and in good condition. Before using the recovery machine, check that it is in satisfactory working order, has been properly maintained and that any associated electrical components are sealed to prevent ignition in the event of a refrigerant release. Consult manufacturer if in doubt. The recovered refrigerant shall be returned to the refrigerant supplier in the correct recovery cylinder, and the relevant Waste Transfer Note arranged. Do not mix refrigerants in recovery units and especially not in cylinders. If compressors or compressor oils are to be removed, ensure that they have been evacuated to an acceptable level to make certain that flammable refrigerant does not remain within the lubricant. The evacuation process shall be carried out prior to returning the compressor to the suppliers. Only electric heating to the compressor body shall be employed to accelerate this process. When oil is drained from a system, it shall be carried out safely.

Copyright © 2025 LG Electronics Ins. All right reserved.
Only training and service purpose.

Product Specifications

Factory Model		W3NQ22TSNS3.AXWGIDA
Buyer Model		UW-Q24WWYA.ASLG
PERFORMANCE		
Cooling	Capacity (W)	Full : 6,200 Half : 3,100
	Capa. Range (W)	2,120 ~ 6,200
	Power (W)	Full : 2252 Half : 836
	Current (A)	10.3
	ISEER	3.47
	Annual Power Consumption	1,384.54
	CFM(m³/min)	14.2
	Refrigerant (g)	520 (R32)
Electrical Ratings		
Voltage		220-240V / 50Hz (Test Voltage : 230V)
Power Factor		95.0% / 95.0%
Feature		
WiFi Connection		Yes
Temperature display		ºC
Temp Control		Thermistor
Air Diflection		4-Way (Manual)
Remote controller		Better / Good LCD
Auto Restart		Yes
Filter Alarm Function		Yes
Timer		24Hr,On/Off
Sleep		7hr,On/Off
Energy saver Fuction		4-in-1, kW Manager
Auto Clean		Yes
Light Off (Display On/Off)		No
Outdoor Vent / Exhaust		Yes
Mode		High / Mid / Low / Sleep
Fan Speed	Cooling	4
	Fan Only	4
Fan Type (ID/OD)		Turbo/Axial
Chassis Type		Slide In-Out
		WT+ Chassis
Type Air Discharge		TOP Discharge
Others		
Noise	Indoor dB(A) (High/Mid/Low/Sleep)	62/59/55/44
	Outdoor dB(A) (High/Mid/Low/Sleep)	68/65/63/55
Carton (mm)	Height	638
	Width	739
	Depth	768
Dimension (Include Front Grille, mm)	Height	450
	Width	660
	Depth	779
Dimension (Front Grille)	Depth	113
Dimension (Except Front Grille, mm)	Height	450
	Width	660
	Depth	666
Net Weight (kg)		48
Gross Weight (kg)		53
Stuffing quantity (40 ft High)		192
Compressor		DST134MCA
Remote controller		AKB75215404 / AKB73598020

Copyright © 2025 LG Electronics Ins. All right reserved.
Only training and service purpose.

Disassembly

— Before the following disassembly, set the CONTROL BOX to OFFand disconnect the power cord.

Mechanical Part

1. Front Grille

1. Open the Inlet grille downward.
2. Remove the screw that fastens the front grille.(See Figure 1)
3. Pull the front grille from the right side.
4. Remove the front grille.(There are 4 hooks.)
5. Disconnect the connector between the front grille and control box.(See Figure 2)
6. Re-install the components by referring to the removal procedure, above.

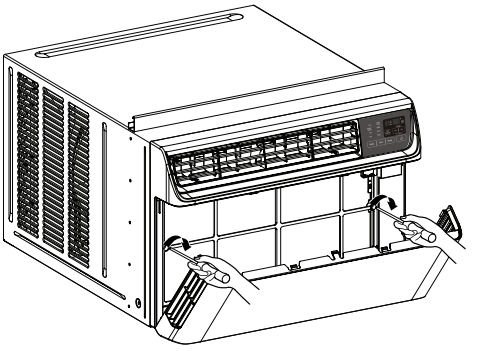

Figure 1

2. Cabinet

1. After disassembling the FRONT GRILLE, remove the 2 screws that fasten the cabinet at both sides.
2. Remove the 2 screws that fasten the cabinet at back.
3. Pull the base pan forward. (See Figure 3)
4. Remove the cabinet.
5. Re-install the components by referring to the removal procedure, above.

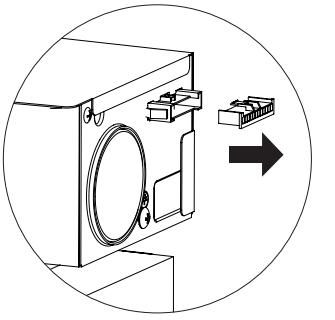

Figure 2

3. Control Box

1. Remove the front grille. (Refer to section 1)
2. Remove the cabinet. (Refer to section 2)
3. Remove the 2 screws that fasten the power cord.
4. Disconnect the grounding screw from the evaporator channel.
5. Remove the 1 screw that fasten the control box cover.
6. Remove the housing which connects PCB and motor wire in the control box.
7. Disconnect the housing that connects Plazma Air Purifier.(Optional)
8. Remove the screw at left cover of filter case and open the cover to remove inner screw. (Optional)
9. Remove the nut that fastens the terminal cover.
10. Remove the terminal cover.
11. Remove all the leads from the overload protector.
12. Discharge the capacitor by placing a 20,000 ohmre-sistor across the capacitor terminals.
13. Raise the control box upward completely. (See Figure 4)
14. Re-install the components by referring to the removal procedure, above. (Refer to the circuit diagram found on page 13 in this manual and on the control box.)

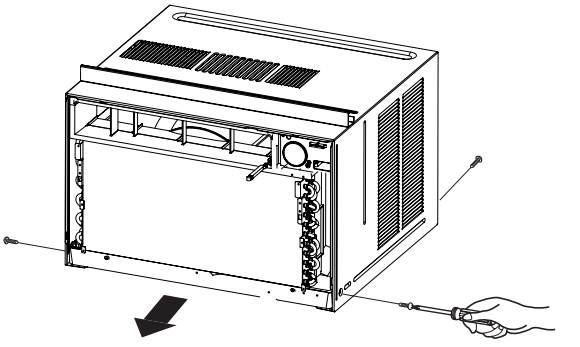

Figure 3

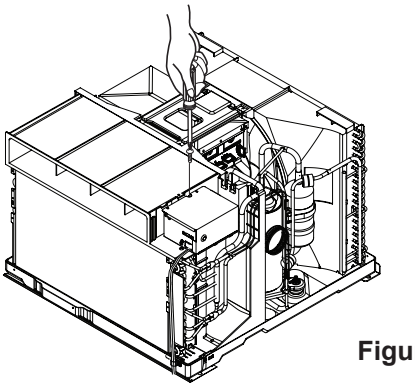

Figure 4

Copyright © 2025 LG Electronics Ins. All right reserved.
Only training and service purpose.

Air Handing Parts

4. Air Guide and Turbo Fan

1. Remove the front grille. (Refer to section 1)
2. Remove the cabinet. (Refer to section 2)
3. Remove the control box. (Refer to section 3)
4. Remove the 4 screws that fasten the brace.
5. Remove the brace.
6. Remove the 2 screws that fasten the air guide upper.
7. Remove the air guide upper.(See Figure 5)
8. Remove the 2 screws that fasten the evaporator.
9. Move the evaporator forward and pulling it upward slightly. (See Figure 6)
10. Pull out the hook of orifice by pushing the tabs and remove it. (See Figure 7)
11. Remove the clamp with a hand plier that secures the turbo fan.
12. Remove the turbo fan.
13. Remove the 2 screws that fasten the air guide from the base pan.
14. Move the air guide backward, and pull out from the base pan.(Move the air giude lower carefully.)
15. Re-install the components by referring to the removal procedure, above.

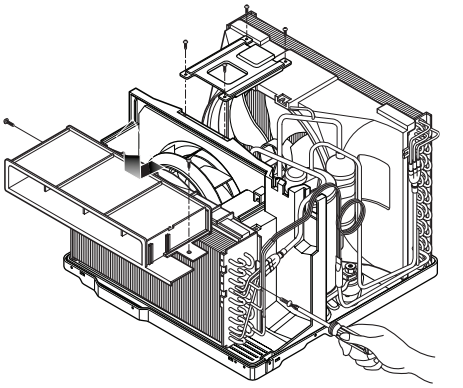

Figure 5

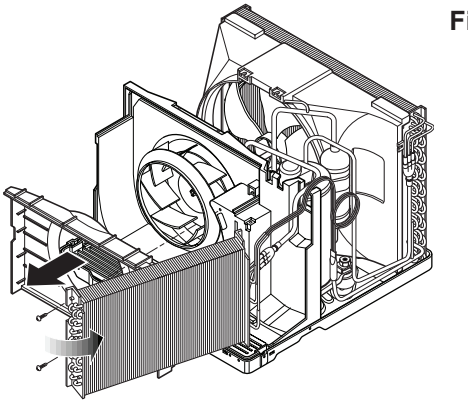

Figure 6

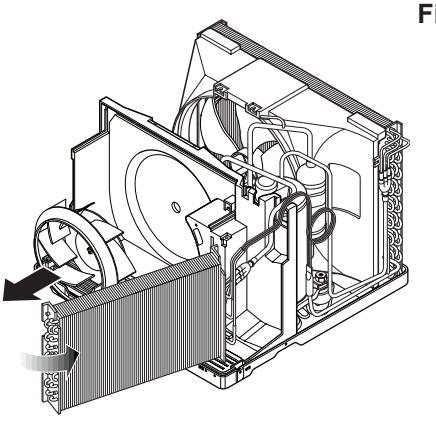

Figure 7

5. FAN

1. Remove the cabinet. (Refer to section 2)
2. Remove the brace (Refer to section 4)
3. Remove the 5 screws that fasten the condenser.
4. Move the condenser to the left carefully.
5. Remove the clamp that secures the fan.
6. Remove the fan. (See Figure 8)
7. Re-install by referring to the removal procedure.

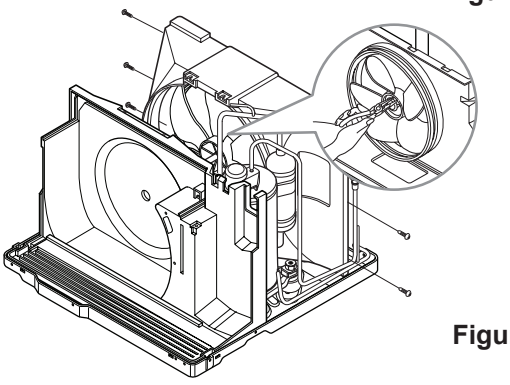

Figure 8

Copyright © 2025 LG Electronics Ins. All right reserved.
Only training and service purpose.

6. Shroud

1. Remove the fan. (Refer to section 5)
2. Remove the shroud. (See Figure 9)
3. Re-install the components by referring to the removal procedure, above.

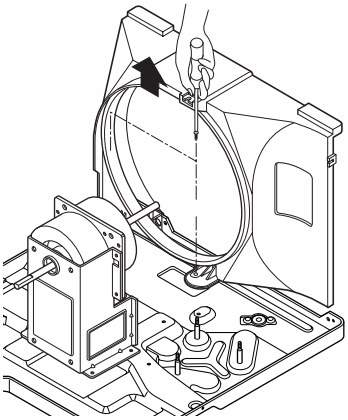

Figure 9

Electrical Parts

7. Power Cord

1. Remove the control box. (Refer to section 3)
2. Open the top cover from the control box. (Refer to section 9)
3. Disconnect two leads from the capacitor and relay.
4. Pull out the power cord.
5. Remove the two screw of power cord clamper on the front of base pan. (See Figure 10)
6. Re-install the component by referring to the above removal procedure, above. (Use only one ground-marked hole for ground connection.)
7. If the supply cord of this appliance is damaged, it must be replaced by the special cord. (The special cord means the cord which has the same specification marked on the supply cord attached at the unit.)

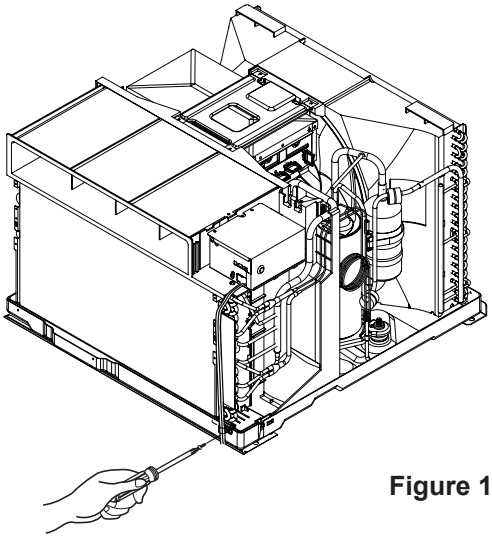

Figure 10

8. Motor

1. Remove the cabinet. (Refer to section 2)
2. Remove the turbo fan. (Refer to section 4)
3. Remove the fan. (Refer to section 5)
4. Remove the 4 screws that fasten the motor from the air guide. (See Figure 11)
5. Remove the motor.
6. Re-install the components by referring to the removal procedure, above.(See Figure 11)

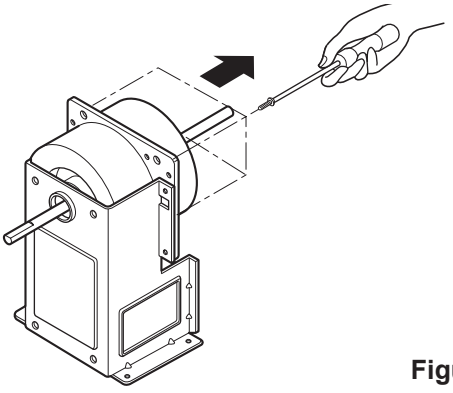

Figure 11

Copyright © 2025 LG Electronics Ins. All right reserved.
Only training and service purpose.

Refrigerating Cycle Diagram

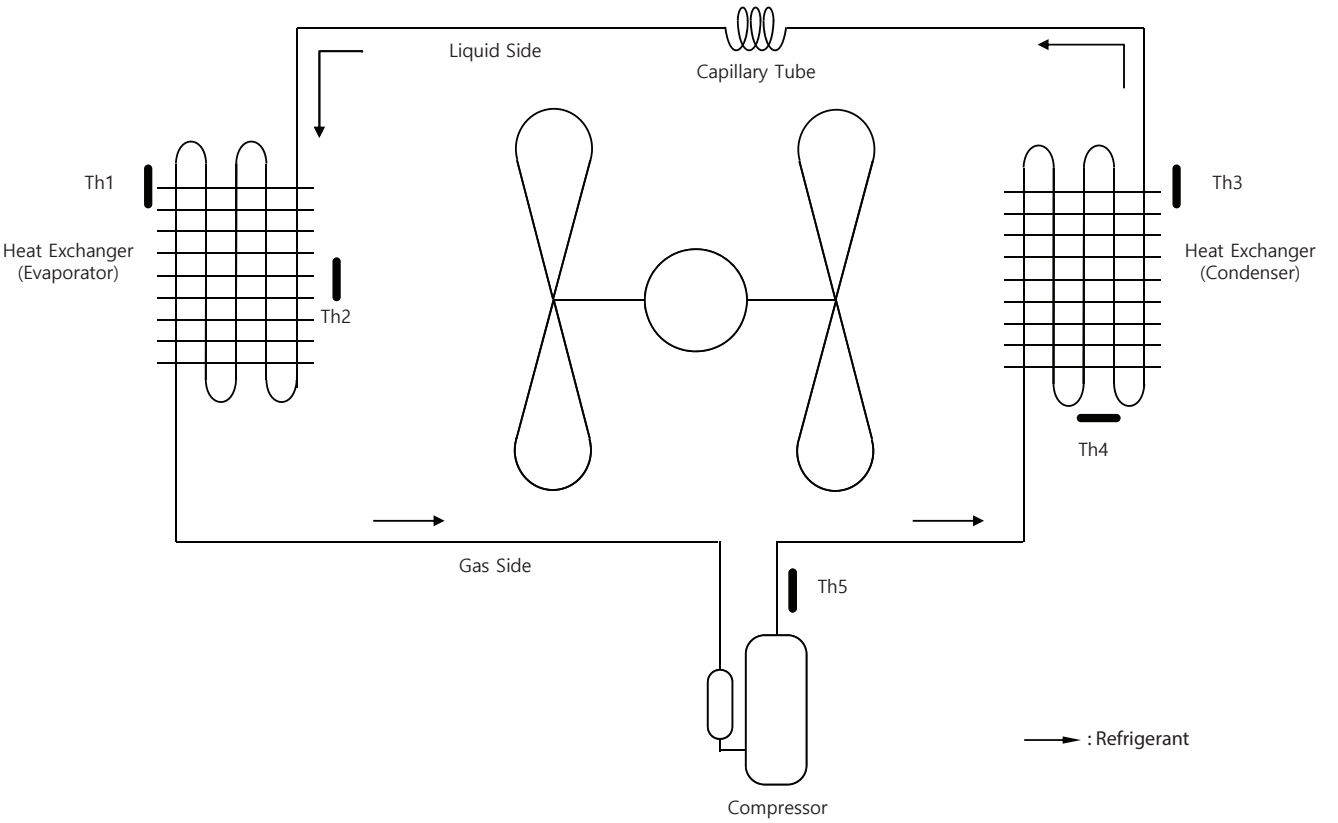

Loc.	Description	PCB Connector
Th1	Thermistor for indoor air temperature	CN-TH1 (Indoor)
Th2	Thermistor for evaporator temperature	
Th3	Thermistor for outdoor air temperature	CN-TH1 (Outdoor)
Th4	Thermistor for condenser temperature	
Th5	Thermistor for discharge pipe temperature	CN-TH2 (Outdoor)

Copyright © 2025 LG Electronics Ins. All right reserved.
Only training and service purpose.

WIRING DIAGRAM

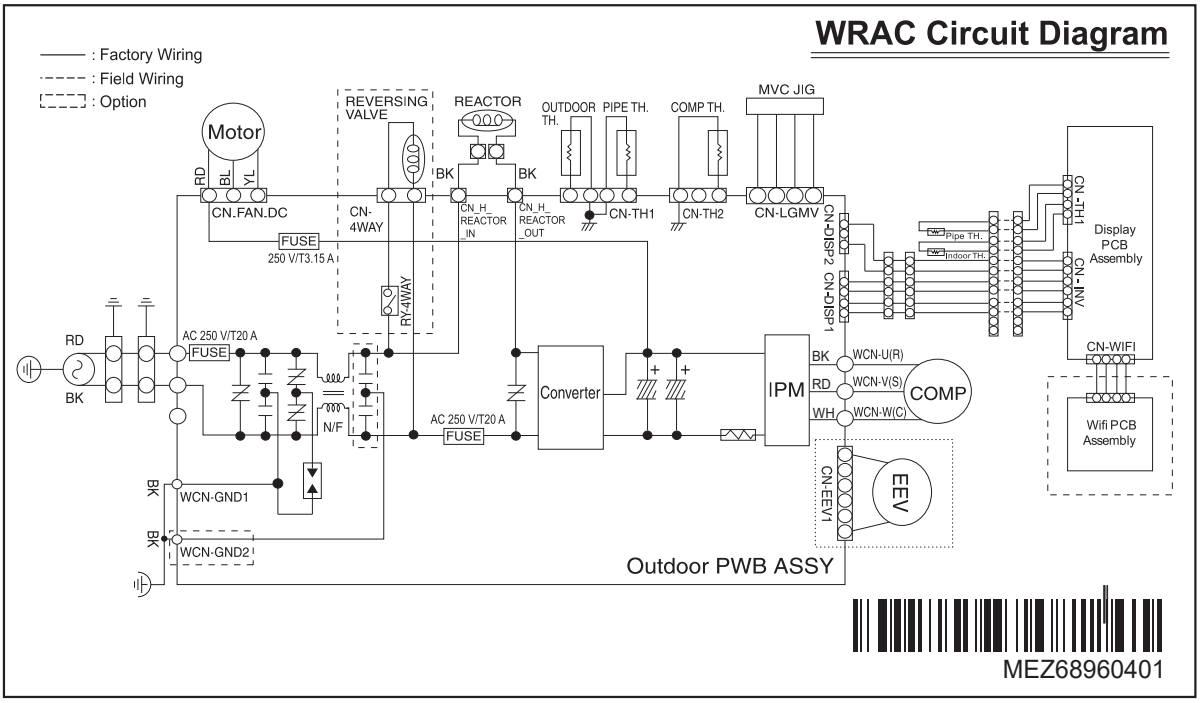

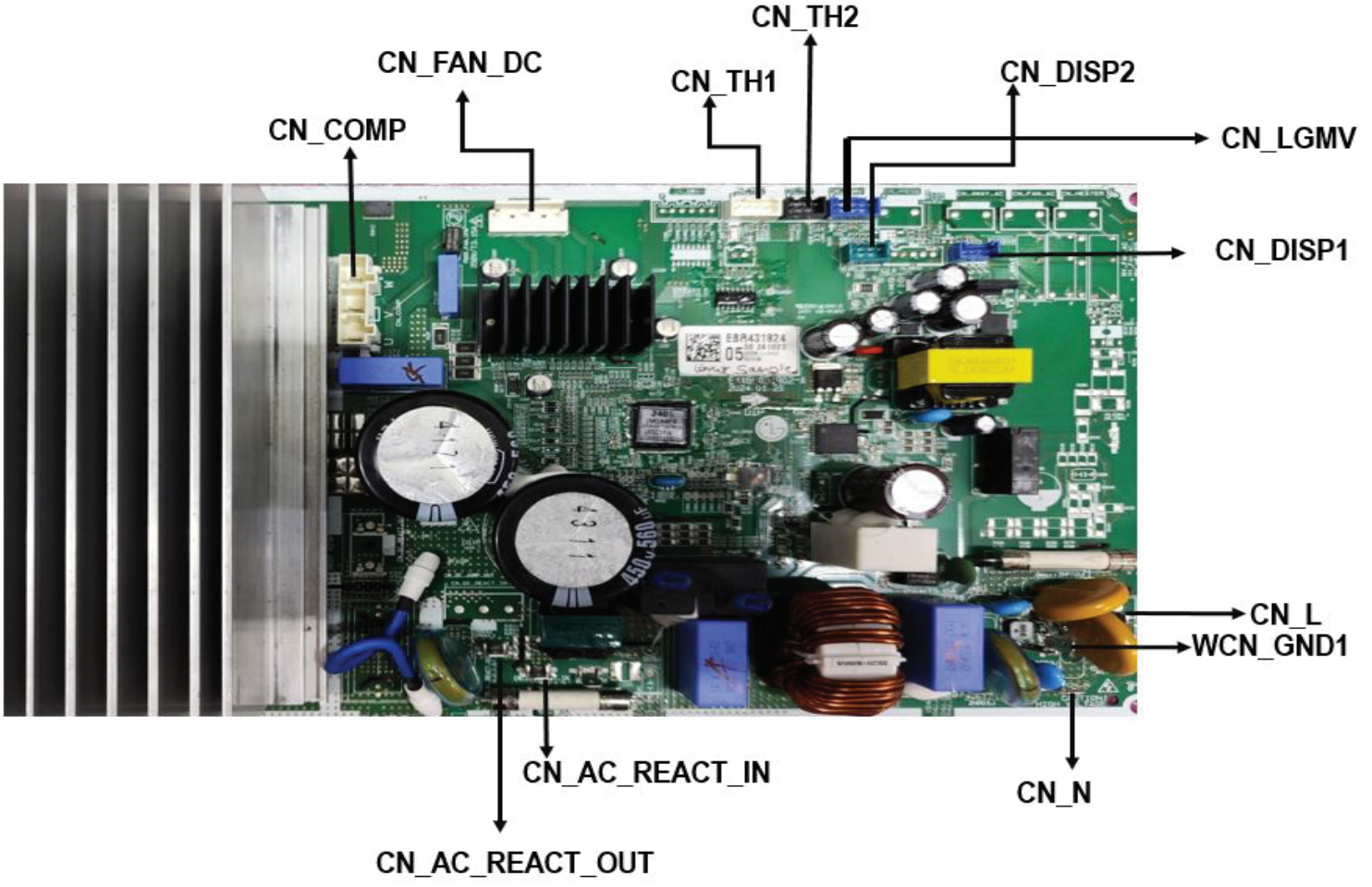

Copyright © 2025 LG Electronics Ins. All right reserved.
Only training and service purpose.

Troubleshooting Guide

Piping System

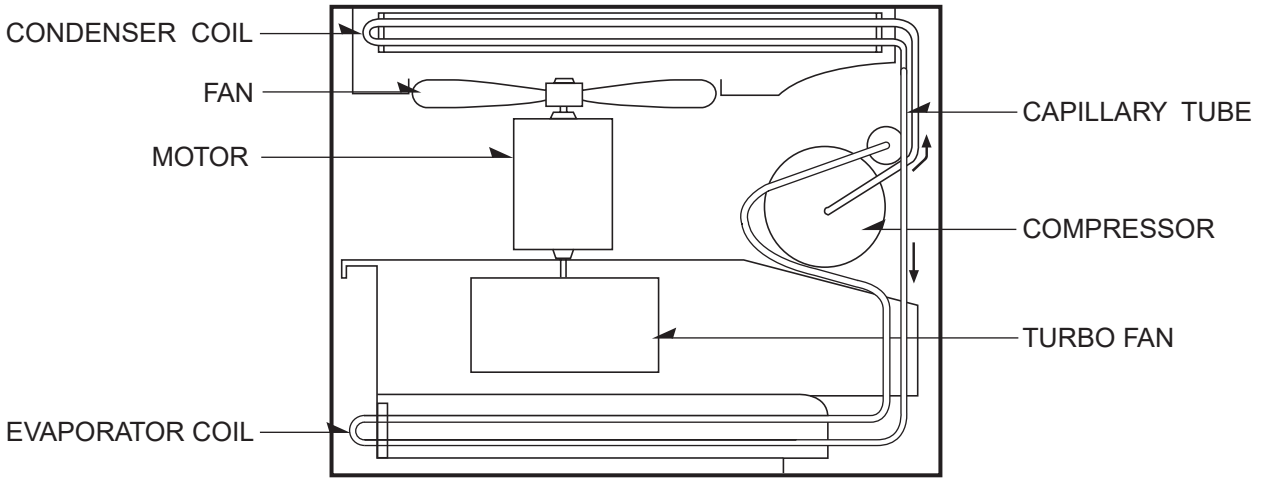

Figure 12 is a brief description of the important components and their function in what is called the refrigeration system. This will help you to understand the refrigeration cycle and the flow of the refrigerant in the cooling cycle.

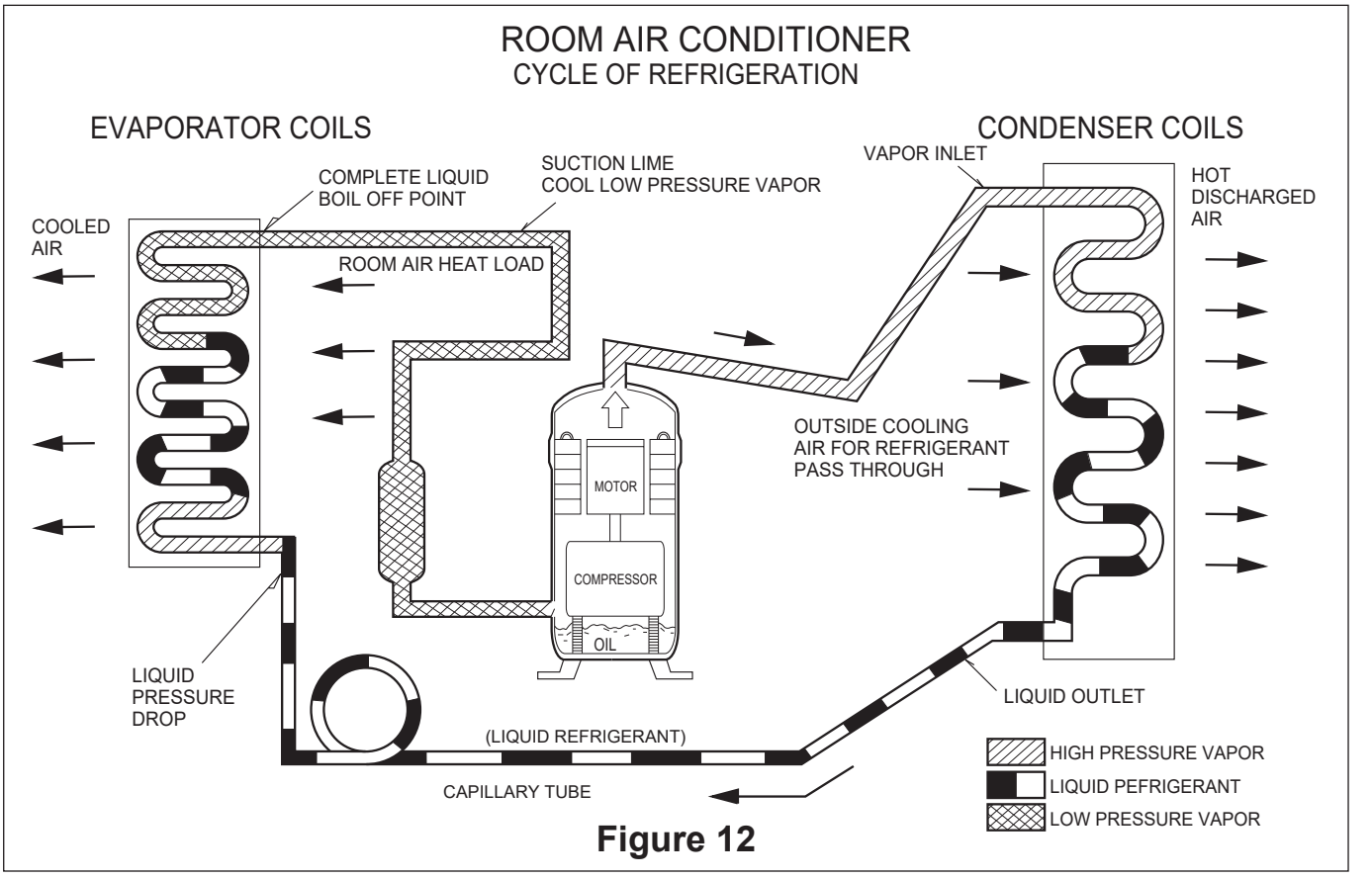

Figure 12

Copyright © 2025 LG Electronics Ins. All right reserved.
Only training and service purpose.

Trobleshooting Guide

In general, possible trouble is classified in two kinds.
The one is called Starting Failure which is caused from an electrical defect, and the other is ineffective Air Conditioning caused by a defect in the refrigeration circuit and improper application.

Unit runs but poor cooling.

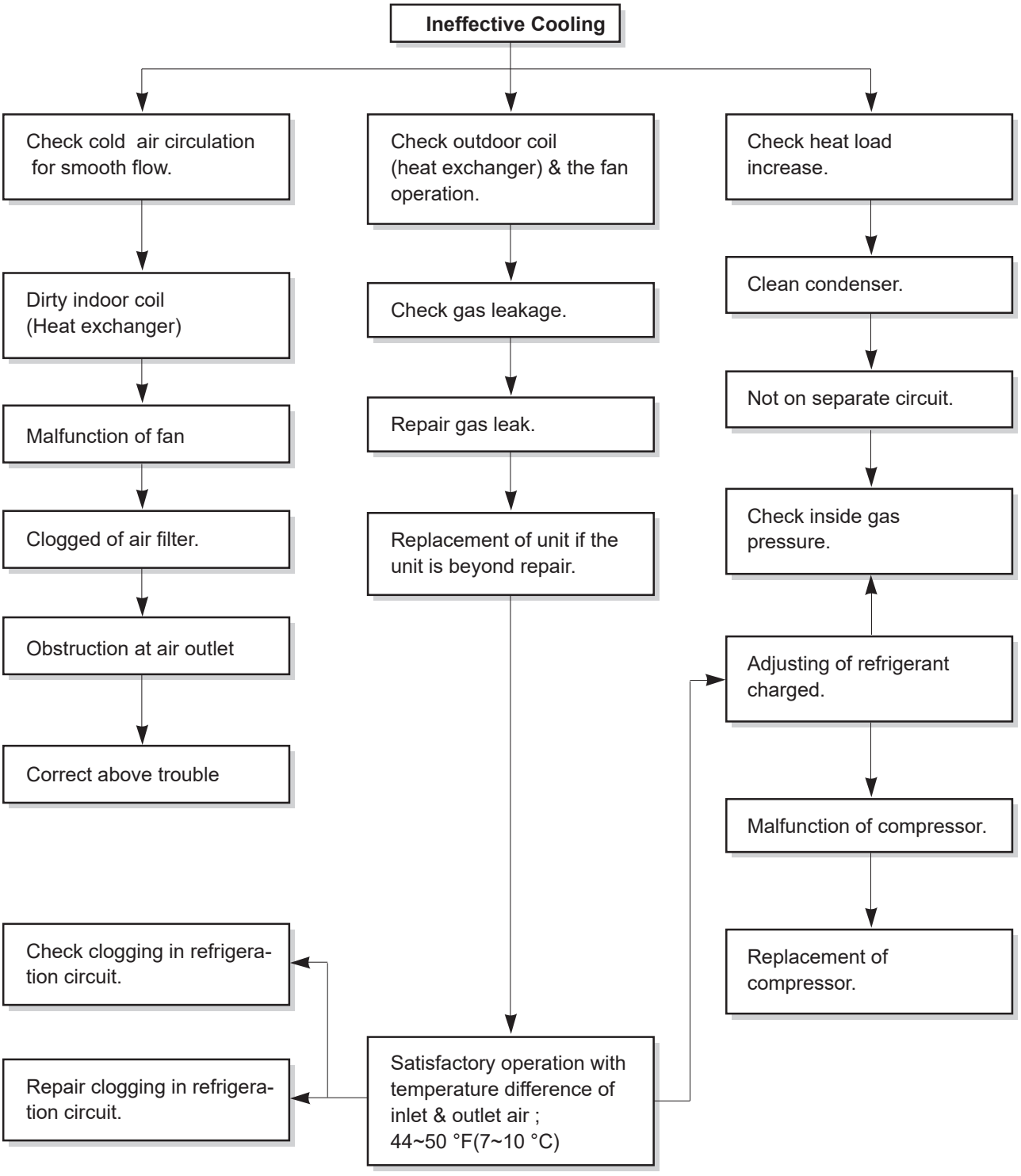

Copyright © 2025 LG Electronics Ins. All right reserved.
Only training and service purpose.

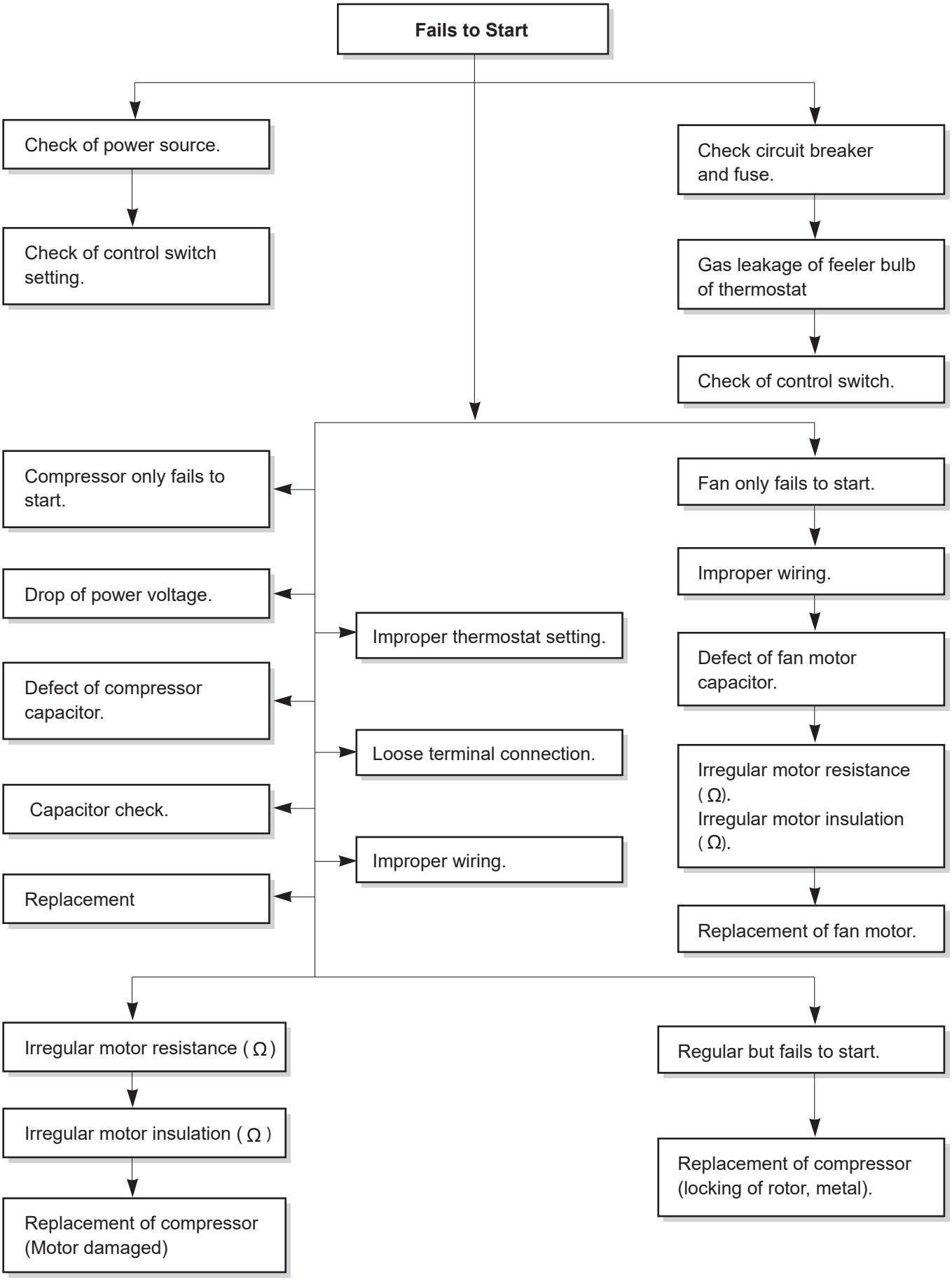

Copyright © 2025 LG Electronics Ins. All right reserved.
Only training and service purpose.

Electrical Parts Troubleshooting Guide

Possible Trouble 1 The unit does not operate.

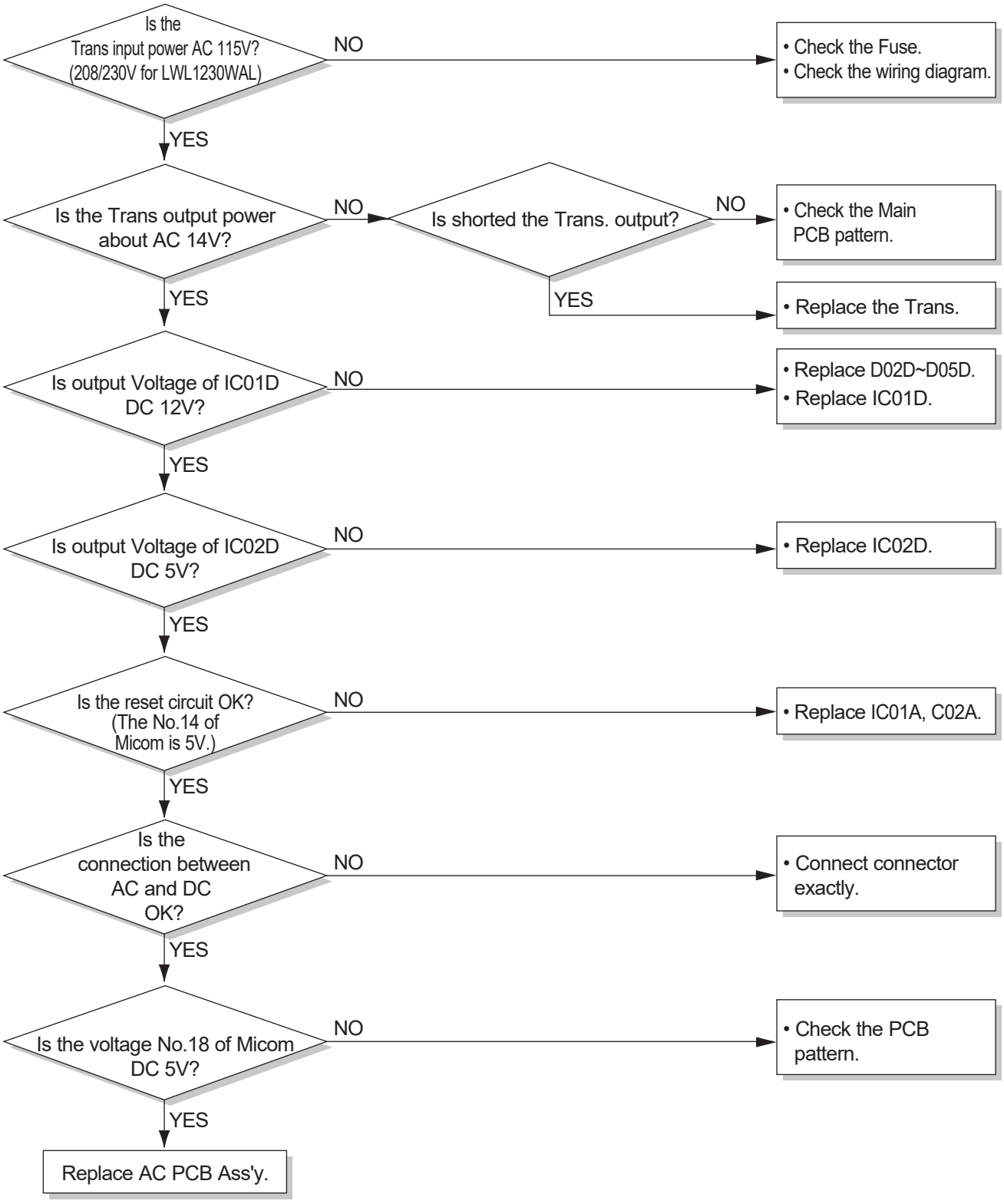

Copyright © 2025 LG Electronics Ins. All right reserved.
Only training and service purpose.

Possible Trouble 2 The compressor does not operate.

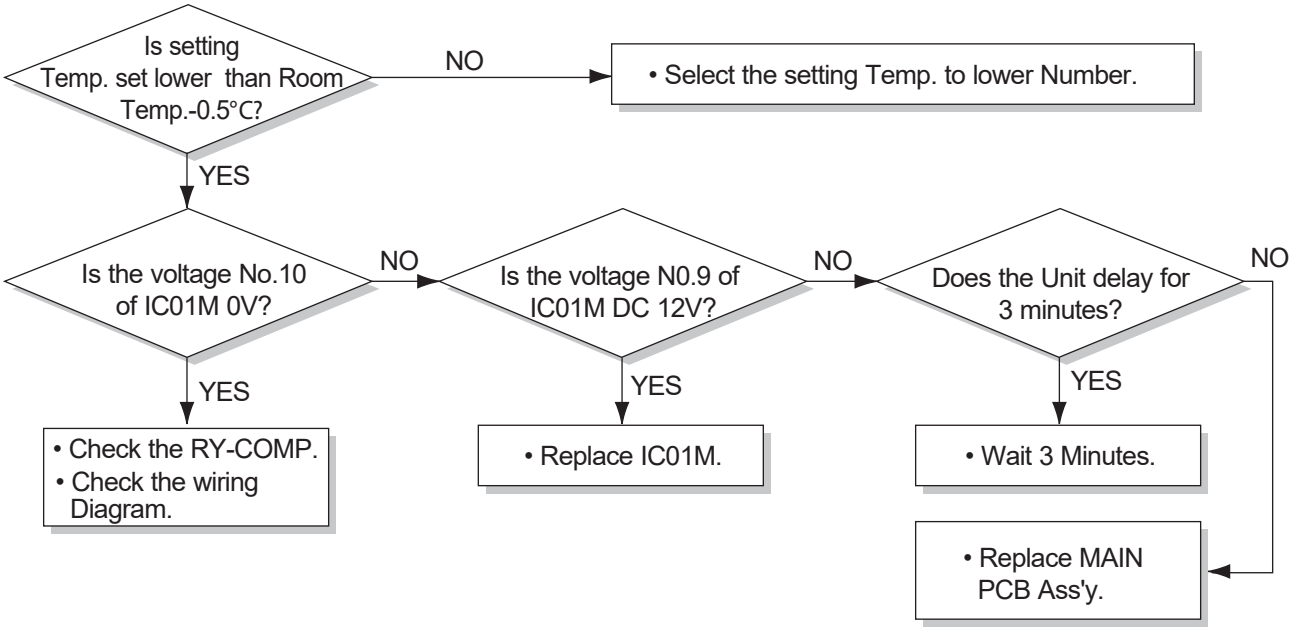

Possible Trouble 3 The compressor always operate.

Copyright © 2025 LG Electronics Ins. All right reserved.
Only training and service purpose.

Possible Trouble 4 FAN does not operate.

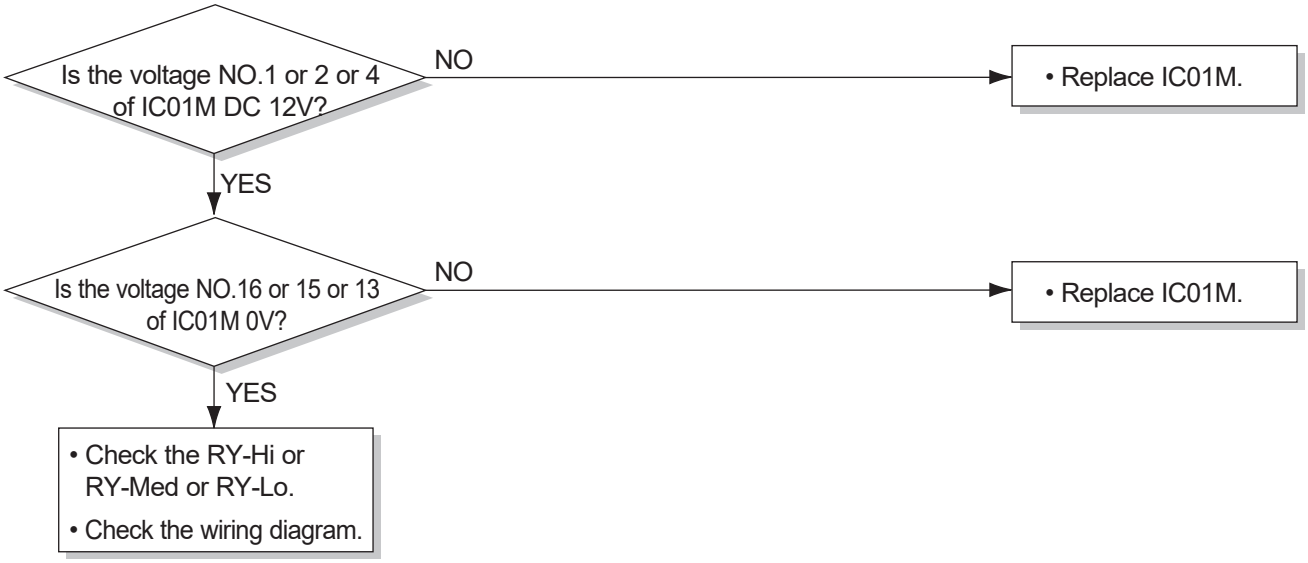

Possible Trouble 5 The function of Energy Saver does not operate.

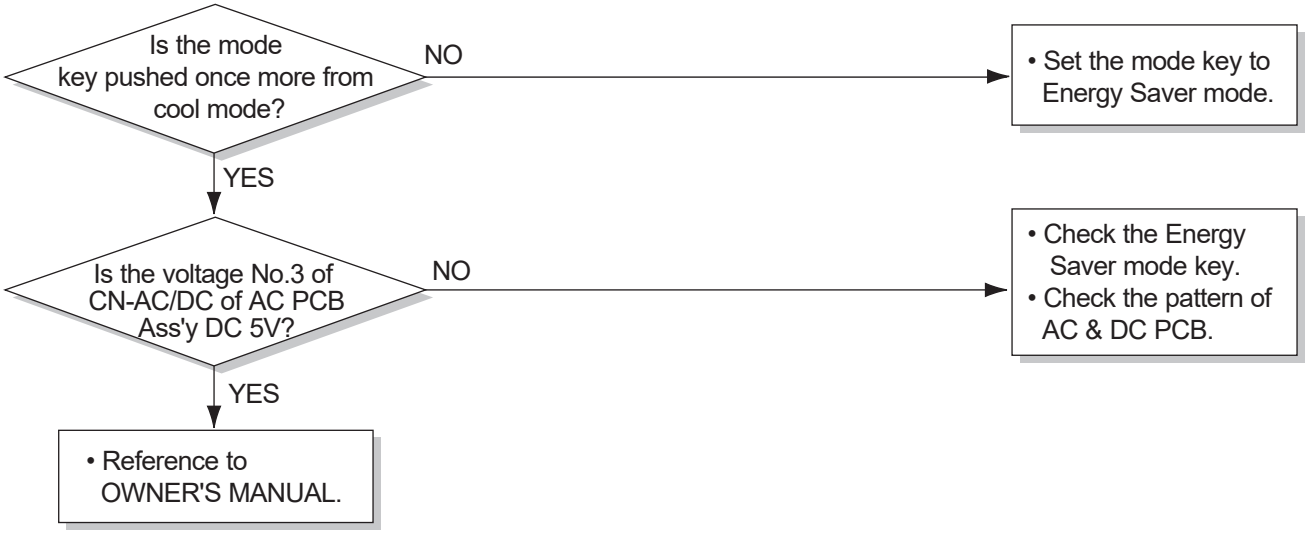

Copyright © 2025 LG Electronics Ins. All right reserved.
Only training and service purpose.

Possible Trouble 6 Remote controller does not operate.

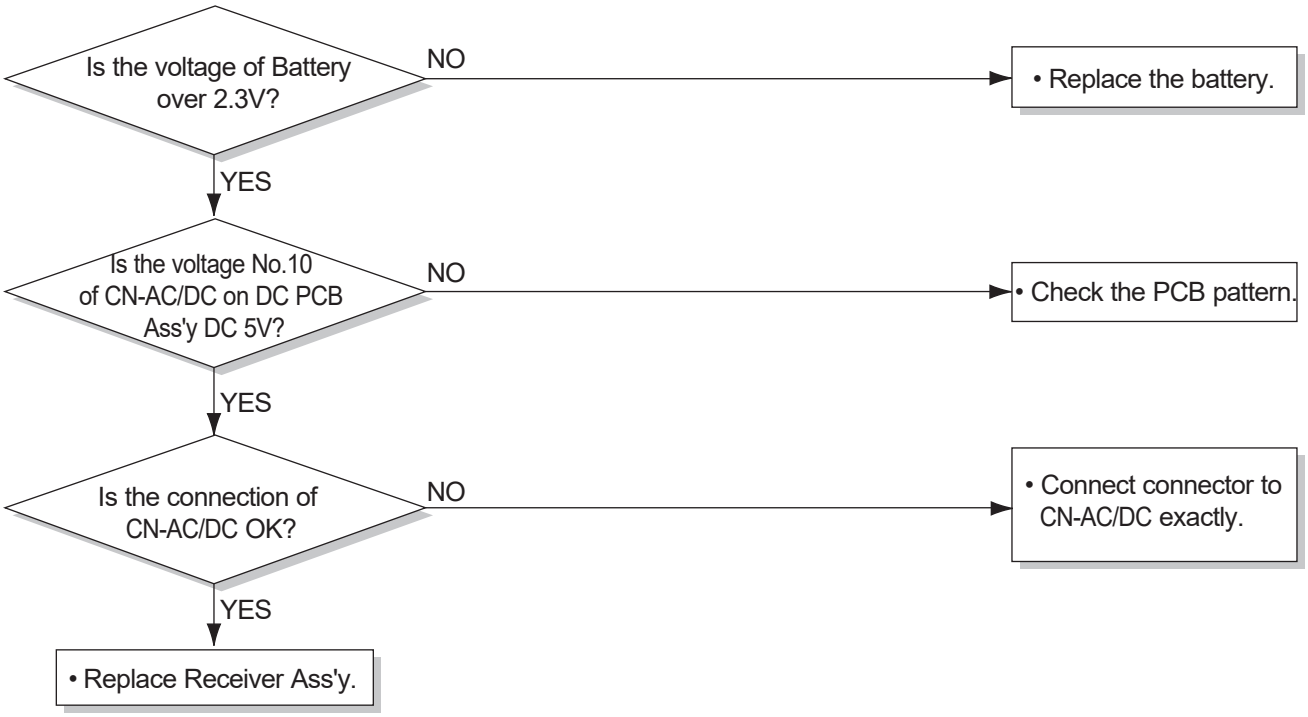

Possible Trouble 7 It displays abnormally on DC PCB Ass’y.

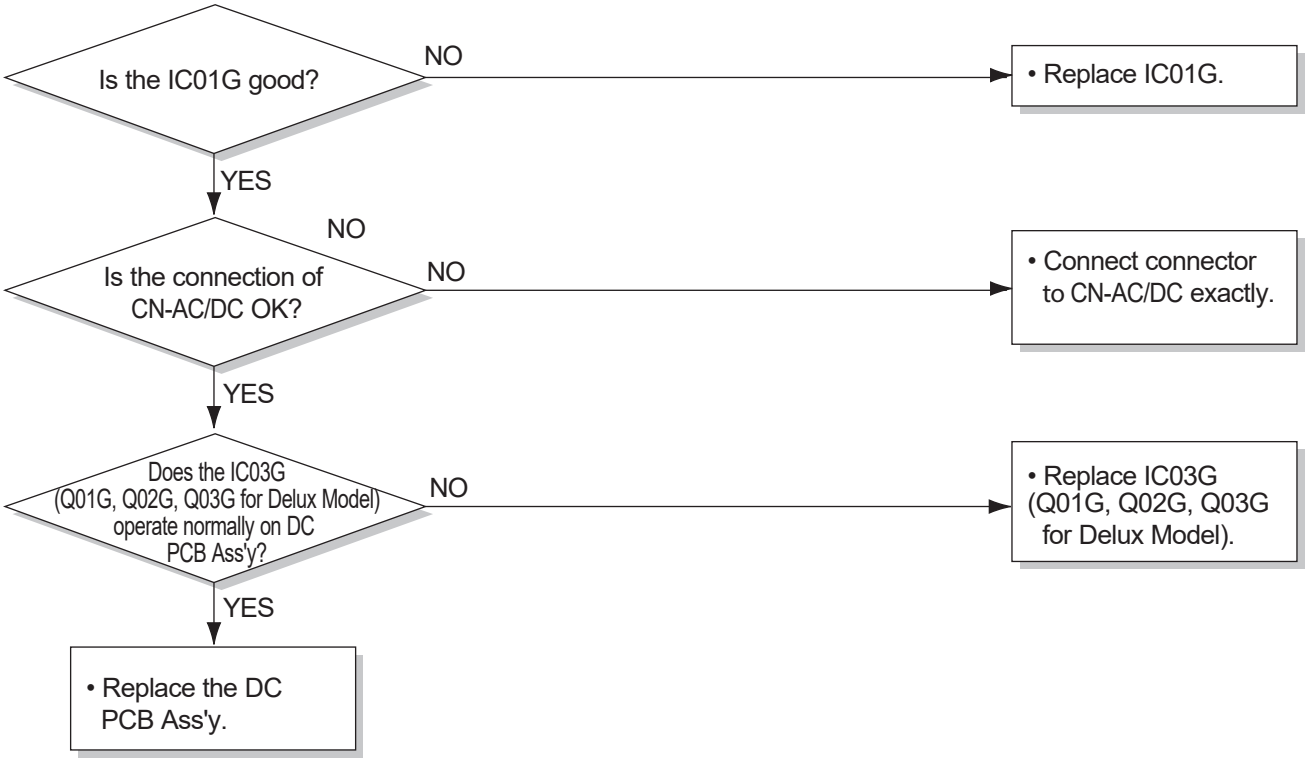

Copyright © 2025 LG Electronics Ins. All right reserved.
Only training and service purpose.

Electric Part

Possible Trouble 1 The unit does not operate.

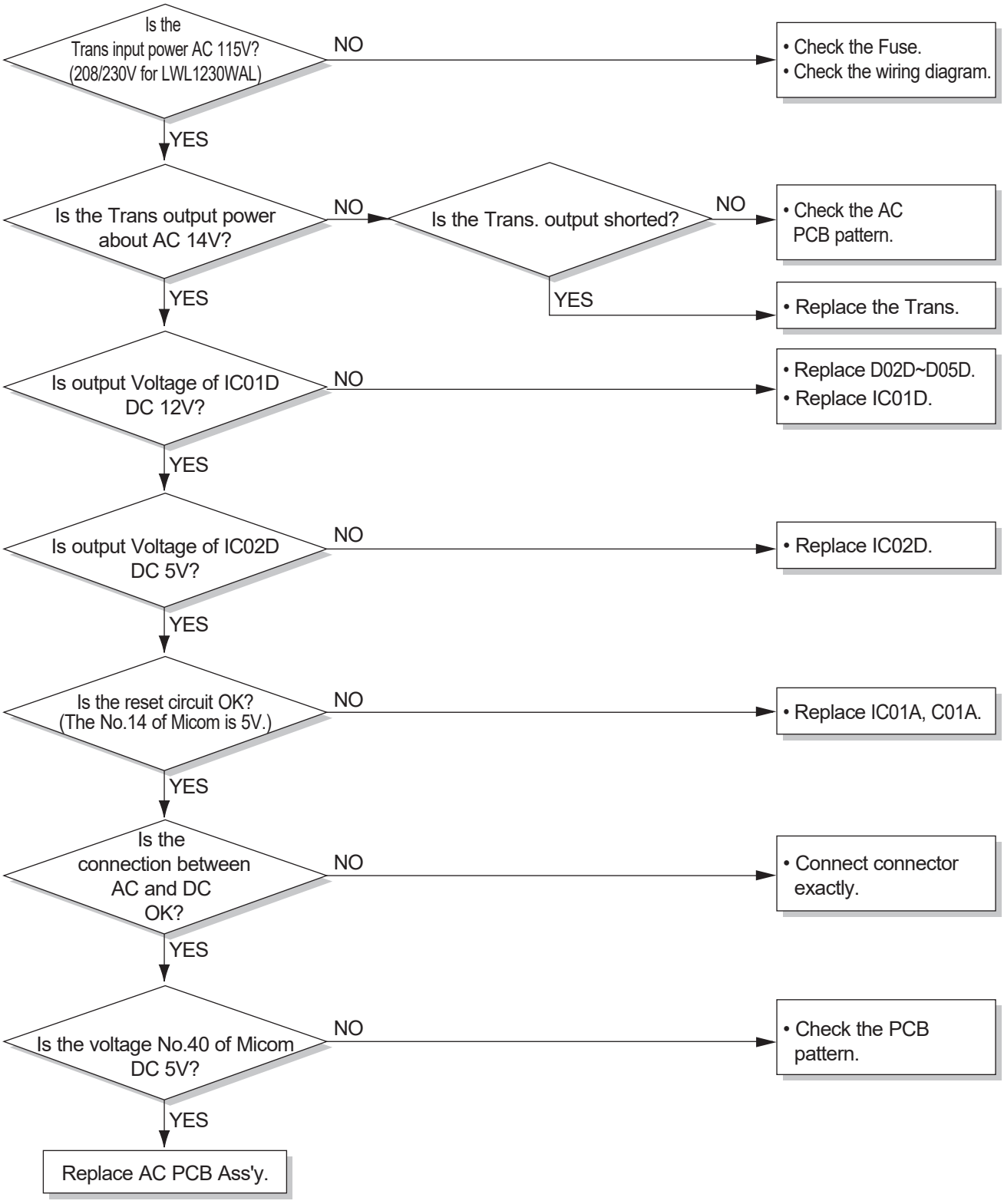

Copyright © 2025 LG Electronics Ins. All right reserved.
Only training and service purpose.

Possible Trouble 2 The compressor does not operate.

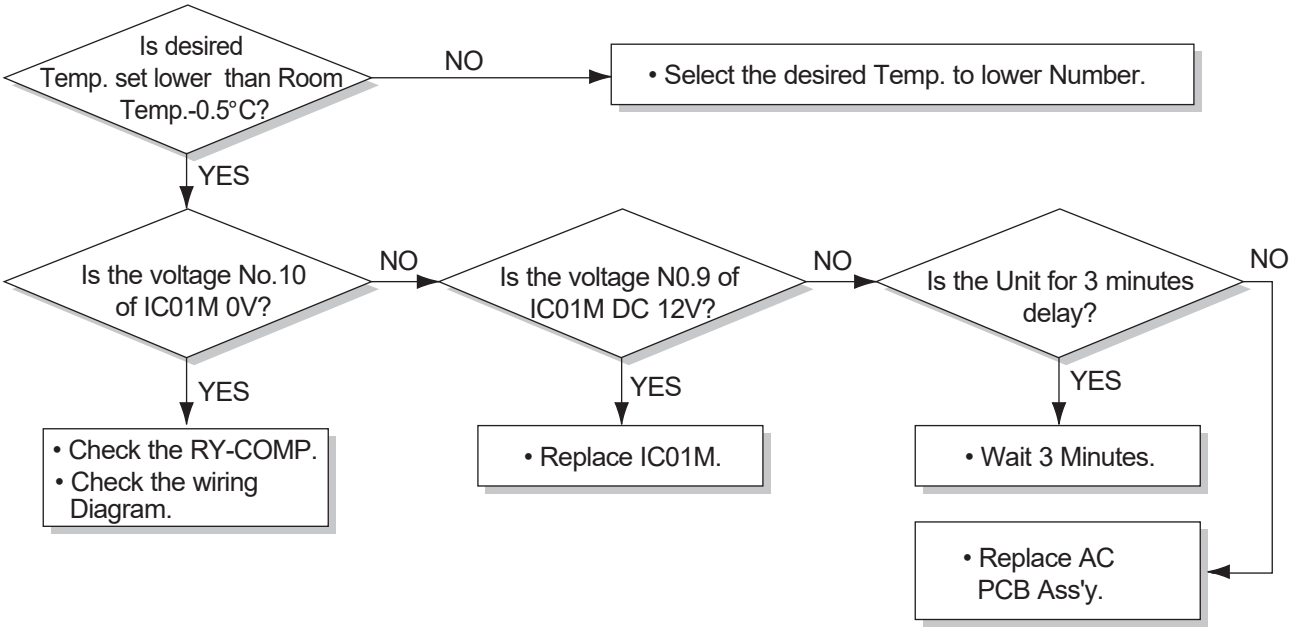

Possible Trouble 3 The compressor always operate.

Copyright © 2025 LG Electronics Ins. All right reserved.
Only training and service purpose.

Possible Trouble 4 FAN does not operate.

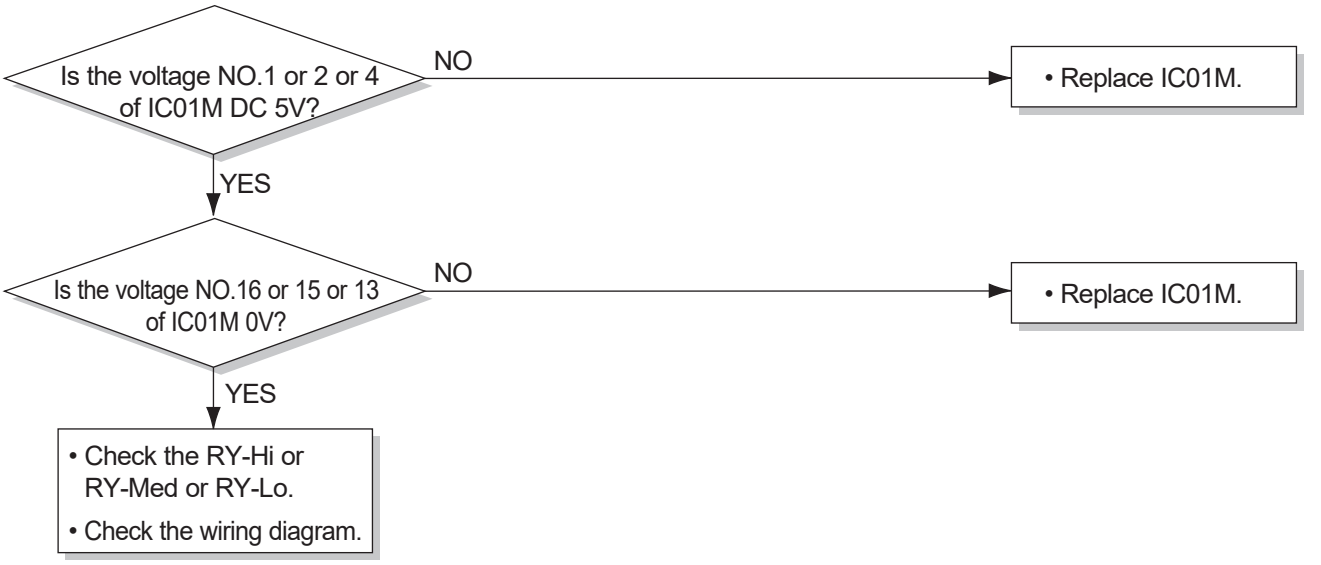

Possible Trouble 5 Remote controller does not operate.

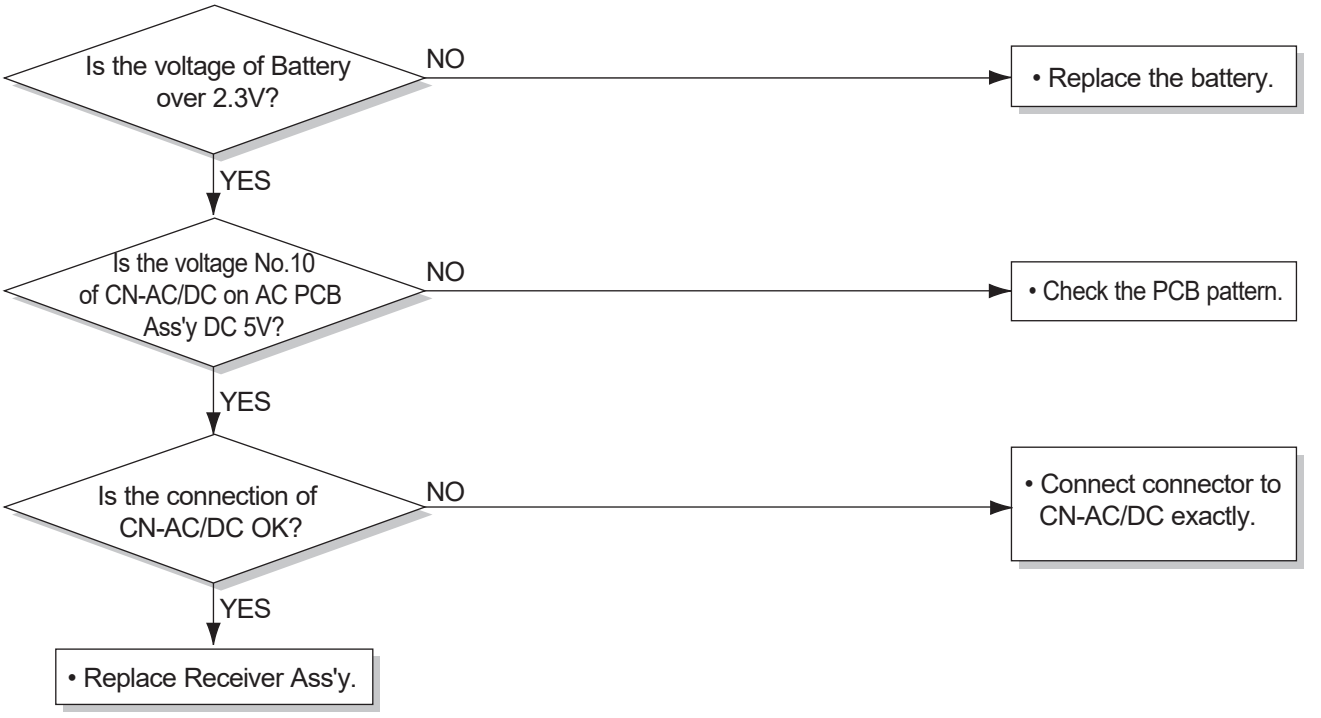

Copyright © 2025 LG Electronics Ins. All right reserved.
Only training and service purpose.

Possible Trouble 6 It displays abnormally on DC PCB Ass’y.

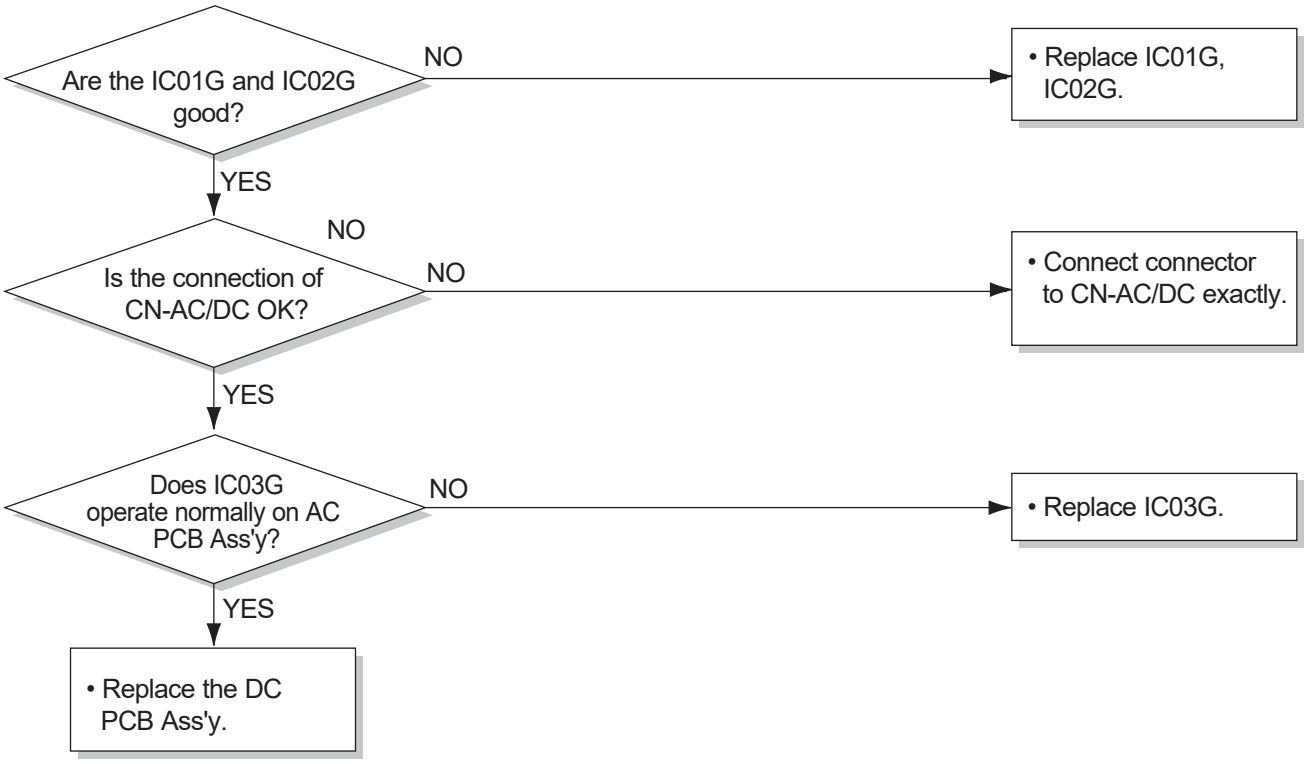

Copyright © 2025 LG Electronics Ins. All right reserved.
Only training and service purpose.

COMPLAINT	CAUSE	REMEDY
Fan motor will not run.	No power	Check voltage at outlet. Correct if none.
	Power supply cord	Check voltage to Control Box. If none, check power supply cord. Replace cord if circuit is open.
	Wire disconnected or connection loose	Connect wire. Refer to wiring diagram for terminal identification. Repair or replace loose terminal.
	Capacitor (Discharge capacitor before testing.)	Test capacitor. Replace if not within ±10% of manufacturer's rating. Replace if shorted, open, or damaged.
	Will not rotate	Fan blade hitting shroud or blower wheel hitting scroll. Realign assembly. Units using slinger ring for condenser fan must have $^{1}/_{4}$ to $^{5}/_{16}$ inch clearance to the base. If it hits the base, shim up the bottom of the fan motor with mounting screw(s). Check fan motor bearings; if motor shaft will not rotate, replace the motor.
Fan motor runs intermittently	Revolves on overload.	Check voltage. If not within limits, call an electrician. Test capacitor. Check bearings. Does the fan blade rotate freely? If not, replace fan motor. Pay attention to any change from high speed to low speed. If the speed does not change, replace the motor.
Fan motor noise.	Fan	If cracked, out of balance, or partially missing, replace it.
	Turbo	If cracked, out of balance, or partially missing, replace it.
	Loose clamper	Tighten it.
	Worn bearings	If knocking sounds continue when running or loose, replace the motor. If the motor hums or noise appears to be internal while running, replace motor.
Compressor will not run, but fan motor runs.	Voltage	Check voltage. If not within limits, call an electrician.
	Wiring	Check the wire connections, if loose, repair or replace the terminal. If wires are off, refer to wiring diagram for identification, and replace. Check wire locations. If not per wiring diagram, correct.

Copyright © 2025 LG Electronics Ins. All right reserved.
Only training and service purpose.

COMPLAINT	CAUSE	REMEDY
Compressor will not run, but fan motor runs.	Thermistor	Check the TEMP control. If not at the lowest number, set TEMP control to this setting and restart the unit. Check the continuity of the thermistor. Replace the thermistor if the circuit is open.
	Capacitor (Discharge capacitor before servicing.)	Check the capacitor. Replace if not within ±10% of manufacturers rating. Replace if shorted, open, or damaged.
	Compressor	Check the compressor for open circuit or ground. If open or grounded, replace the compressor.
	Overload	Check the compressor overload, if externally mounted. Replace if open. (If the compressor temperature is high, remove the overload, cool it, and retest.)
Compressor cycles on overload.	Voltage	Check the voltage. If not within limits, call an electrician.
	Overload	Check overload, if externally mounted. Replace if open. (If the compressor temperature is high, remove the overload, cool, and retest.)
Compressor cycles on overload.	Fan motor	If not running, determine the cause. Replace if required.
	Condenser air flow restriction	Remove the cabinet. inspect the interior surface of the condenser; if restricted, clean carefully with a vacuum cleaner (do not damage fins) or brush. Clean the interior base before reassembling.
	Condenser fins (damaged)	If condenser fins are closed over a large area on the coil surface, head pressures will increase, causing the compressor to overload. Straighten the fins or replace the coil.
Compressor cycles on overload.	Capacitor	Test capacitor.
	Wiring	Check the terminals. If loose, repair or replace.
	Refrigerating system	Check the system for a restriction.
Insufficient cooling or heating	Air filter	If restricted, clean of replace.
	Exhaust damper door	Close if open.
	Unit undersized	Determine if the unit is properly sized for the area to be cooled.
Excessive noise	Turbo or fan	Check the set screw or clamp. If loose or missing, correct. If the turbo or fan is hitting air guide, rearrange the air handling parts.
	Copper tubing	Remove the cabinet carefully and rearrange tubing not to contact cabinet, compressor, shroud, and barrier.

Copyright © 2025 LG Electronics Ins. All right reserved.
Only training and service purpose.

Error Message

■ Error Indicator

- The function is to self-diagnosis air conditioner and express the troubles identically if there is any trouble.
- If more than two troubles occur simultaneously, primarily the highest trouble of error code is expressed.
- After error occurrence, if error is released, error LED is also released simultaneously.
- To operate again on the occurrence of error code, be sure to turn off the power and then turn on.
- Having or not of error code is different from Model.

■ Caution

- CH01~12 are related to the indoor unit problems , and CH21~73 are related to the outdoor unit problems except CH05/53. Do not replace the indoor unit parts based on CH21~73 errors except CH53, or replace the outdoor unit parts based on CH01~12 errors except CH05.
- Main errors among the outdoor unit errors will display in the indoor unit only when they are detected 10 times per hour. Therefore the type of errors can be identified from LED on the outdoor unit PCBA even before it is displayed in the indoor unit. Check for the LED on the outdoor unit PCBA.
- After removing the cause of CH error, turn power off and on after 3 minutes, and then Display indicator will disappear from the outdoor unit PCBA or indoor unit. It requires 3 minutes to fully discharge the outdoor unit PCBA.

■ Display of error code

Ex) Error Code CH05

Copyright © 2025 LG Electronics Ins. All right reserved.
Only training and service purpose.

■ Descriptions of error code

Error Code	Descriptions
1	Indoor unit room temperature sensor error
2	Indoor unit inlet pipe sensor error
3	Wired remote control error
4	Float switch error(optional)
5	Communication error between indoor and outdoor units
6	Indoor unit outlet pipe sensor error
9	Indoor unit EEPROM error
10	Indoor unit BLDC motor fan lock
12	Indoor unit middle pipe sensor error
21	DC Peak (IPM Fault)
22	CT 2 (Max CT)
23	DC Link Low Volt
26	DC Comp Position Error
27	PSC Fault
29	Comp Phase Over-Current
30	CT err (Low Current)
32	Inverter Compressor D-Pipe Overheat
34	High Pressure Sensor High
35	Low Pressure Sensor Low
36 (38)	Refrigerant Leakage Detection
37	Exceed the Compression Ratio Limit
40	CT Sensor Error
41	D-Pipe Sensor Error
42	Low Pressure sensor Error
43	High Pressure sensor Error
44	Outdoor Air Sensor Error
45	Cond. Middle Pipe Sensor Error
46	S-Pipe Sensor Error
47	Const D-PipeTh Error
48	Cond. Pipe Error (Open / Short)
49	Voltage Sensor (Open / Short)
51	Excess Capacity (Mismatching between In/Outdoor unit)
52	Communication Error(INV Board <-> Main Board)
53	Communication Error (IN-OUT)
60	EEPROM Check Sum Error
61	Cond. Pipe High
62	Heat Sink Sensor Temp. High
65	Heatsink Th Error
67	BLDC Motor Fan Lock
72	Detect 4 Way Valve Transfer Failure 7 Times

Copyright © 2025 LG Electronics Ins. All right reserved.
Only training and service purpose.

Exploded View

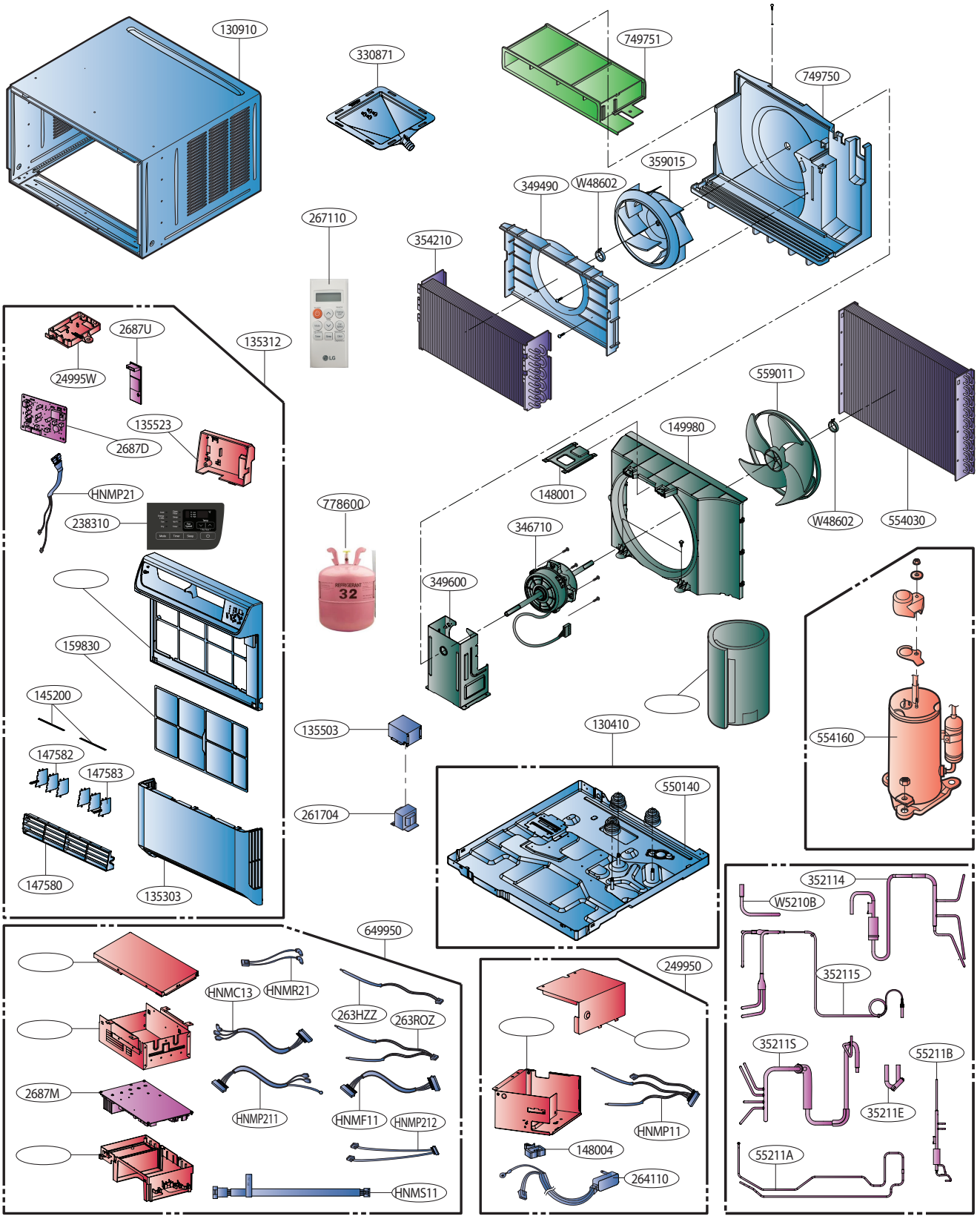

LOC.	Description	PCB Connector
263ROZ	Thermistor for outdoor air temperature	CN-TH1(OUTDOOR)
	Thermistor for condensing temperature	
263HZZ	Thermistor for discharge pipe temperature	CN-TH2(OUTDOOR)

Copyright © 2025 LG Electronics Inc.
All right reserved.Only training and service purposes.

MFL05745905

Yr' 2025